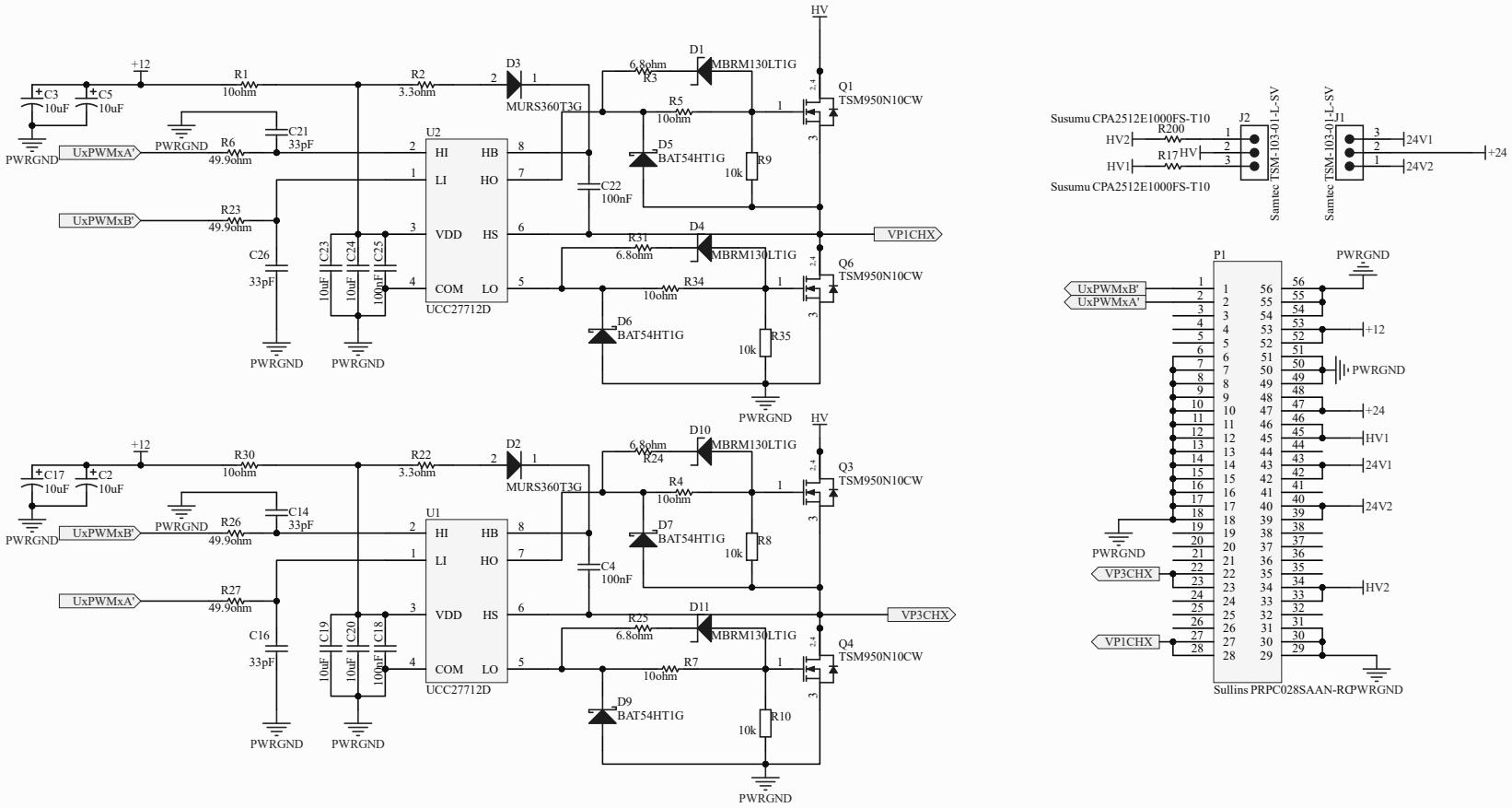
HV
+12
R1
10ohm
R2
3.3ohm
D3
MURS360T3G
D1
MBRM130LT1G
6.8ohm
R3
R5
10ohm
Q1
TSM950N10CW
C3
10uF
C5
10uF
PWRGND
UxPWMxA'
R6
49.9ohm
C21
33pF
U2
HI
HB
LI
HO
VDD
HS
COM
LO
UCC27712D
D5
BAT54HT1G
R9
10k
C22
100nF
UxPWMxB'
R23
49.9ohm
C26
33pF
C23
C24
C25
10uF
10uF
100nF
R31
6.8ohm
D4
MBRM130LT1G
Q6
TSM950N10CW
VP1CHX
R34
10ohm
D6
BAT54HT1G
R35
10k
D10
MBRM130LT1G
R24
R4
10ohm
Q3
TSM950N10CW
C17
10uF
C2
10uF
R30
10ohm
R22
3.3ohm
D2
MURS360T3G
C14
33pF
R26
49.9ohm
U1
D7
BAT54HT1G
R8
10k
C4
100nF
R27
49.9ohm
C16
33pF
C19
C20
C18
VP3CHX
R25
6.8ohm
D11
MBRM130LT1G
Q4
TSM950N10CW
R7
10ohm
D9
BAT54HT1G
R10
10k
Susumu CPA2512E1000FS-T10
R200
HV2
R17
HV1
J2
Samtec TSM-103-01-L-SV
J1
24V1
24V2
+24
P1
Sullins PRPC028SAAN-RC
VP3CHX
VP1CHX
HV2
HV1
24V1
24V2
+12
+24